DEVAR Inc.
706 Bostwick Avenue, Bridgeport, CT 06605
TEL: 203-368-6751 FAX: 203-368-3747
1-800-566-6822 www.devarinc.com

Model 18-265I

ISOLATED, INDICATING, 2 WIRE
pH TRANSMITTER
IN EXPLOSION PROOF HOUSING

PRODUCT NAME:

TABLE OF CONTENTS	PAGE NUMBER AND REFERENCE DOCUMENTS*
1. GENERAL DESCRIPTION	PAGE 2
2. FIELD WIRING 18-265I	A515208
3. SCHEMATIC 18-265I	A515207
4. GENERAL DIMENSIONS	A514912
5. 18-265 REFERENCE DOCUMENTATION	
PRODUCT DESCRIPTION	A513275
EXTERNAL WIRING	B513221
CALIBRATION RESISTOR SELECTION	A513286
CALIBRATION COMPONENT LOCATION	A513422
FINAL CALIBRATION PROCEDURE	A514921
6. 18-LPIX REFERENCE DOCUMENTATION	
TECHNICAL BULLETIN	18-LPIX
CALIBRATION PROCEDURE	A515081
P.C. ASSEMBLY (TOP BOARD, SHT 1 OF 2)	B511560

GENERAL DESCRIPTION

The 18-265I Isolated, 2 Wire Transmitter accepts an input from a high impedance pH or ORP probe and provides local indication of the process, displayed in engineering units, on a large 3½ digit liquid crystal display, as well as a proportional 4 to 20 mA output.

The unit consists of an 18-265 pH Transmitter and a modified 18-LPIX Digital Indicator mounted in a rugged, double sided, NEMA 4, housing, suitable for use in hazardous locations, Class 1, Groups B, C and D, Class 2, Groups E, F and G, and Class 3.

The 18-265 Transmitter is mounted in the deep side of the double sided housing, where access for the input wiring is provided through a 1/2 inch NPT opening. The output current from the 18-265 is fed through, to the 18-LPIX Indicator, located in the shallow side of the housing. Access to the shallow side of the housing is provided by means of two 3/4 inch NPT openings. Output loop wiring is made to a 2 position terminal block mounted on the face of the 18-LPIX.

This drawing is the sole property of CONTROL PRODUCTS DIVISION of DEVAR Inc., and is submitted on the understanding that the contents hereof are not published and are not to be disclosed to third persons without permission.

DWG NO | SH

REVISIONS			
REV	DESCRIPTION	DATE	APPROVED
	SEE PAGE 1		

INDICATOR SIDE

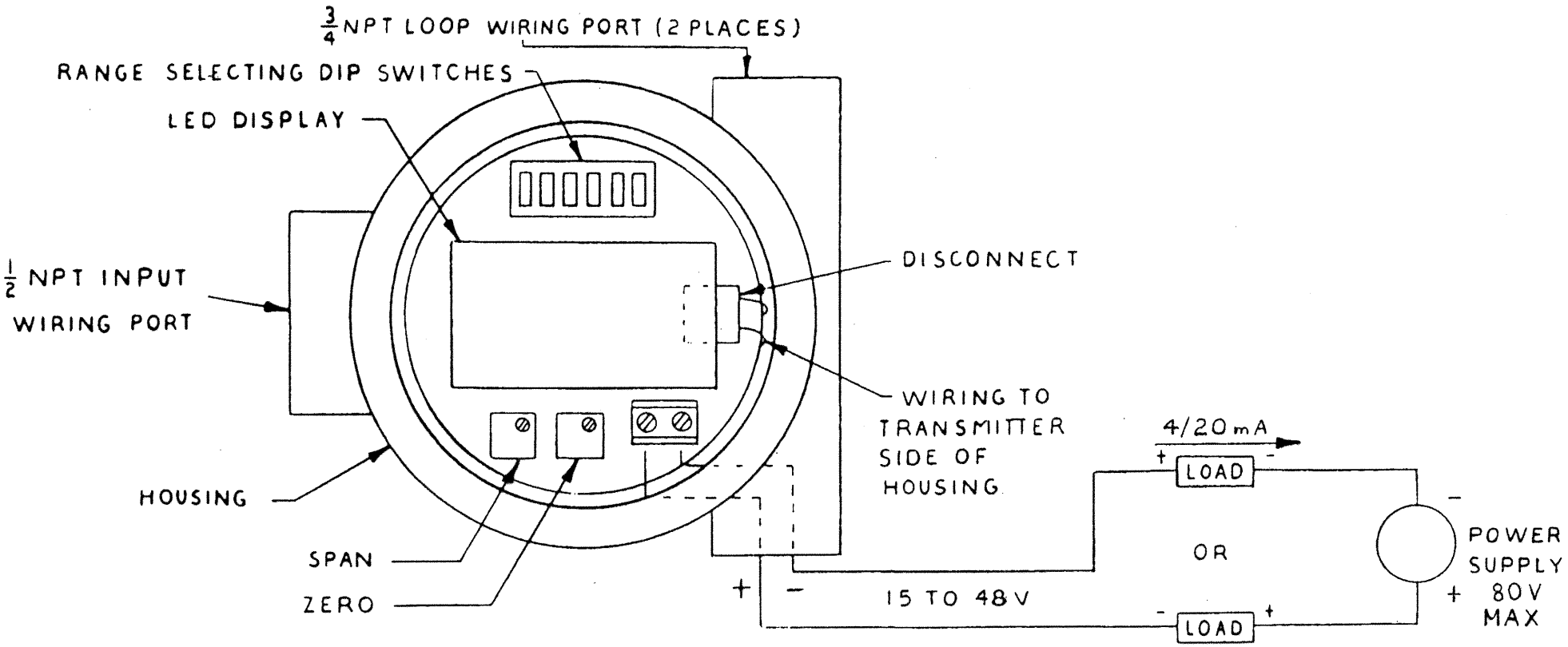

TOLERANCES UNLESS SPECIFIED DECIMAL DIM. ± .005 FRACT. DIM. ± 1/64 ANGLES ± 1/2°	CONTRACT NO.		
MATERIAL	PREPARED	MF	5/4/90
	CHECKED	LFG	5/4/90
	MECH		
	ELEC		
FINISH	DESIGN		
	APPROVED	a.g.	5/7/90
NEXT ASS'Y NO. B/M515192	APPROVED		

DEVAR Inc. 706 Bostwick Avenue, Bridgeport, Conn. 06606
CONTROL PRODUCTS DIVISION

FIELD WIRING, 18-265I
ISOL. pH TRANSMITTER W/INDICATION

SIZE	DRAWING NO.	REV
A	515208	A
SCALE	WT	SHEET 2 OF 2

This drawing is the property of CONTROL PRODUCTS DIVISION of DEVAR Inc., and is submitted on the understanding that the contents hereof are not published and are not to be disclosed to third persons without permission.

REVISIONS

REV	DESCRIPTION	DATE	APPROVED
A	RELEASE; ECN 2894	4-19-88	a.r.

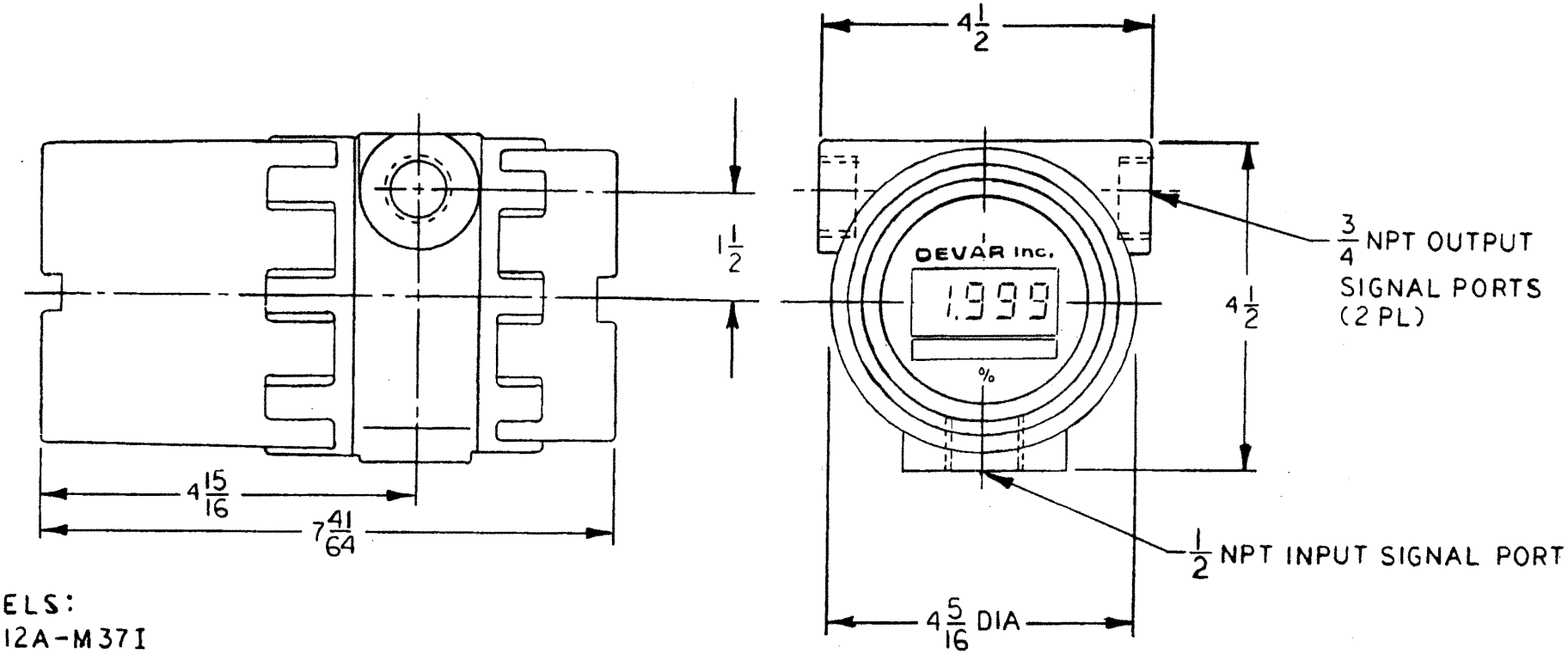

MODELS:
18-212A-M37I
18-215A-M37I
18-265I

TOLERANCES UNLESS SPECIFIED DECIMAL DIM. ± .005 FRACT. DIM. ± 1/64 ANGLES ± 1/2°	CONTRACT NO.		
MATERIAL	PREPARED	MF	2/26/88
	CHECKED	LFG	4/18/88
	MECH		
FINISH	ELEC		
	DESIGN		
	APPROVED a.r. 8-2-88		
NEXT ASS'Y NO. B/M 514998	APPROVED		

DEVAR Inc. 706 Bostwick Avenue, Bridgeport, Conn. 06605
CONTROL PRODUCTS DIVISION

GENERAL DIMENSIONS, EXPLOSION PROOF INDICATING TRANSMITTER (M37I), DOME COVER

SIZE	DRAWING NO.	REV
A	514912	A

SCALE N.T.S. WT 5.5 LBS. SHEET 1 OF 1

LVIE PRESS

e. Amplifier Drift	Less than 100uV, or 0.0017pH per month, nonaccumulative
f. Electrical Classifications	Circuit designed to meet requirements of intrinsic-safety and ISA RP 12.2
g. Stray Rejections	Transverse: 20Db at 60Hz Common-Mode At 120VAC,60Hz, less than 0.25% of Span Output Shift

2.2 POWER SUPPLY REQUIREMENTS

$E_{Min.}$	$E_{Max.}$	Output
12.V + (R_{Load} x 20mA)	70V	4/20mA
14.V + (R_{Load} x 50mA)	70V	10/50mA

2.3 INPUTS

a. Input Impedance	10^{12} Ohms
b. Source Current	Less than 1.pA @ 25 C
c. Input from pH Electrodes	
1. pH Span set with fixed resistors and trimmer adjustor.	Between 1.5 and 14 pH
2. Mid-range of 7pH, set with standarize trimmer adjustor.	Greater than ±10% of span
3. Elevate or suppress pH with fixed resistor and trimmer adjustor.	0 to 12.5pH
4. pH Solution Temperature Compensation	Provided with manual temperature compensator (M) or for use with automatic thermo-compensator, such as Uni-Loc #2000150 (B) or Van London #160014 (B)
d. Input from Redox, Ion-Selective electrodes or other mV Input Source.	Output is directly proportional to input signal (18-265R)
1. Input Span, set with fixed resistors and trimmer adjustor.	Between 100 to 1000mV
2. Input signal can be suppressed with fixed resistor and trimmer adjustor. (Ex. Range 500 to 700mV.)	Suppression up to 1000mV Elevation to (-)400mV. Combined span & offset up to 1200mV.

CONTROL PRODUCTS DIVISION
706 Bostwick Avenue Bridgeport, Conn. 06605

DEVAR INC.

DRAWN:	APPR	ORDER NO.	DRAWING NO.	REV.
5/6/77	A.H		513275	C

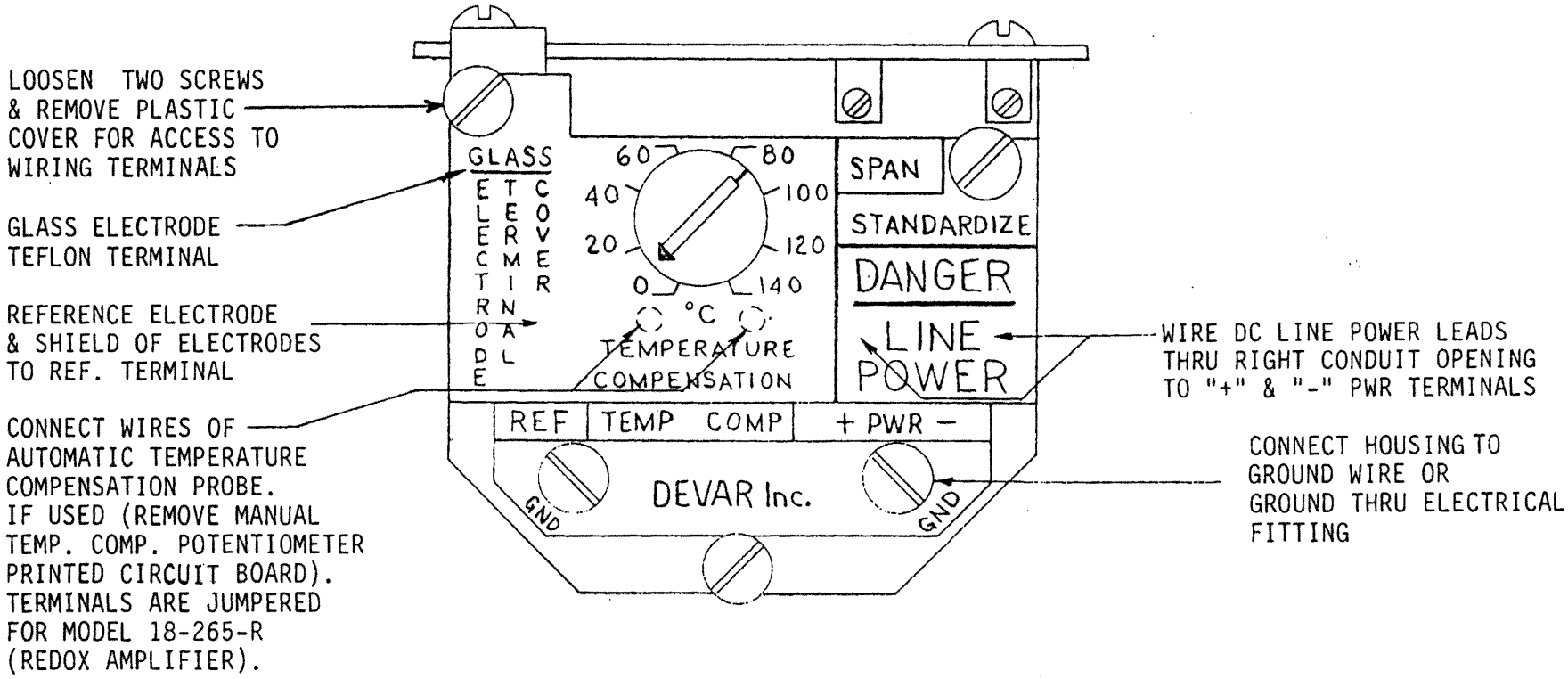

EXTERIOR WIRING 18-265

DEVAR INC

513221 REV.B

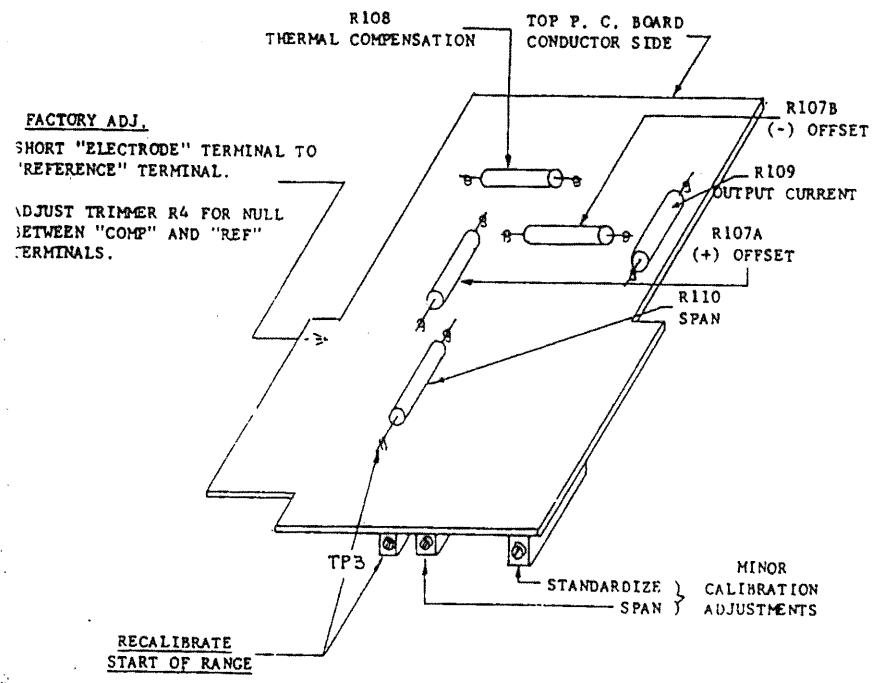

APPLY MINIMUM RANGE SIGNAL BETWEEN "ELECTRODE" AND "REF" TERMINALS.

MEASURE VOLTAGE BETWEEN TP3 AND "REF" TERMINAL.

ADJUST TRIMMER R6 FOR NULL.

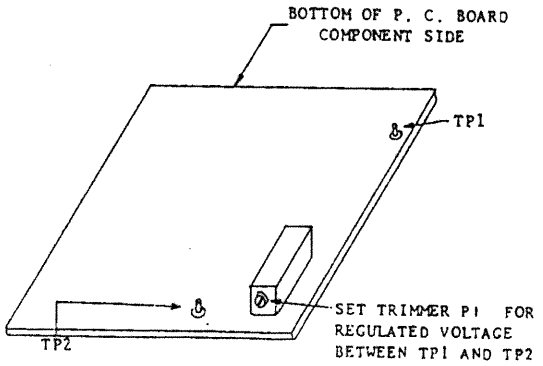

DEVAR INC.

18-265 LOCATION OF CALIBRATI
RESISTORS AND POTENTIOMETER

B-513422 REV A

DEVAR Inc.

EXPLOSION PROOF INDICATOR
MODEL 18-LPIX, 18-LPIX-1V AND 18-LPIX-SR

* LOOP POWERED
* ENGINEERING UNIT READOUT
* INTRINSICALLY SAFE
* LINEAR OR SQUARE ROOT RESPONSE
* WIDE TEMPERATURE OPERATION

FM APPROVED *

GENERAL DESCRIPTION

The 18-LPIX is a two-wire digital indicator that provides local process indication on a 3-1/2 digit, liquid crystal display. Deriving its power directly from the input signal, the 18-LPIX can be mounted at any convenient viewing location along the 4 to 20 mA loop.

The 18-LPIX provides a digital readout that is directly proportional to the current input. The indicator is calibrated at the factory to display 0 to 100.0% for a 4 to 20 mA input signal. However, it can easily be recalibrated in the field to read directly in any desired engineering units. A selection of stick-on labels of commonly used engineering units such as GPM, PSI, °F, etc. is provided with each indicator.

Recalibration of the 18-LPIX is accomplished through the use of switches and trim-pots. The span and zero can be configured to display any desired range.

Final adjustments are quickly made using the non-interactive, 15 turn, span and zero potentiometers. Decimal point positions (or no decimal point) are also switch selectable. The 18-LPIX provides negative polarity indication, which appears when displaying quantities such as -300 to 1000°F. The negative sign can be disabled by means of a switch.

An additional feature found on the model 18-LPIX-1V is the internal calibrator. By simply switching into the calibrate mode, the indicator can be field calibrated while installed in a working 4 to 20 mA loop. The indicator can also be calibrated on the bench using a conventional calibrator or by connecting a 1 to 1.5 Volt power source (flashlight battery) across the input terminals and switching to the calibrate mode.

The 18-LPIX is housed in a NEMA-4X explosion proof enclosure.

CALIBRATION PROCEDURE FOR
18-LPI, 18-LPI-SR, 18-LPIX, & 18-LPIX-SR

Calibration Procedure for Linear Operation

To calibrate the 18-LPI, 18-LPI-SR, 18-LPIX, and 18-LPIX-SR remove the front cover to expose the terminal block and calibrating switches. If you have the 18-LPI-SR switch the selector switch, located on the lower PC board, to the linear position. Potentiometer P1, located on the lower PC board is an offset balance pot and has been set at the factory and should only be adjusted when square root is being extracted. Reference the calibration switch setting chart below and calibrate the loop powered indicators as follows:

1) Determine desired display for 4 to 20mA input.
   EXAMPLE: –30.0 to 195.0°F

2) Set span switches S1 and S2 for proper span range.
   EXAMPLE: Span = 1950–(–300) = 2250 counts; set S1-off, S2-off

3) Set zero switches S3 and S4 for proper zero range.
   EXAMPLE: Zero = –300 counts; set S3-off, S4-off

4) Select decimal point.
   EXAMPLE: Select P3 decimal point; set S8-on, S6-off, S7-off

5) Enable or disable negative polarity indication.
   EXAMPLE: Enable negative sign; set S5-on

6) Input 4mA and set zero pot for bottom of range.
   EXAMPLE: adjust zero pot to display –30.0

7) Input 20mA and set span pot for top of range.
   EXAMPLE: adjust span pot to display 195.0

8) The indicator is now calibrated.

CALIBRATION SWITCH SETTINGS					
SPAN	S1	S2	ZERO	S3	S4
4000 / 2470	ON	OFF	2000 / 573	OFF	ON
2470 / 1530	OFF	OFF	573 / -573	OFF	OFF
1530 / 000	OFF	ON	-573 / -2000	ON	OFF

ENABLE DECIMAL POINT			TO ENABLE NEGATIVE POLARITY INDICATION	
1.999	S6	ON	S5	ON
19.99	S7	ON		
199.9	S8	ON		

REV.	ECN	DESCRIPTION	APPR.	DATE
B	3384	REDRAWN IN ELECTRONIC FORMAT		
A	2917	RELEASE	AG	01-31-89

DEVAR Inc.
706 Bostwick Ave. Bridgeport CT 06605
Tel: (203) 368 6751;Fax: (203) 368 3747
e-mail: info@devarinc.com

18-LPI, 18-LPI-SR, 18-LPIX, 18-LPIX-SR
CALIBRATION PROCEDURE

PREPARED	RNT	10-09-08	NEXT ASSY.	SCALE	PAGE	DRAWING NO.	REV.
CHECKED			BM514722-0001	NONE	1 OF 2	515081-0001	B

This drawing is the sole property of CONTROL PRODUCTS DIVISION of DEVAR Inc. and is submitted on the understanding that the contents hereof are not published and are not to be disclosed to third persons without permission

DWG NO. | SH

REVISIONS			
REV	DESCRIPTION	DATE	APPROVED
A	RELEASE; CO-71816	9-1-89	a.s.

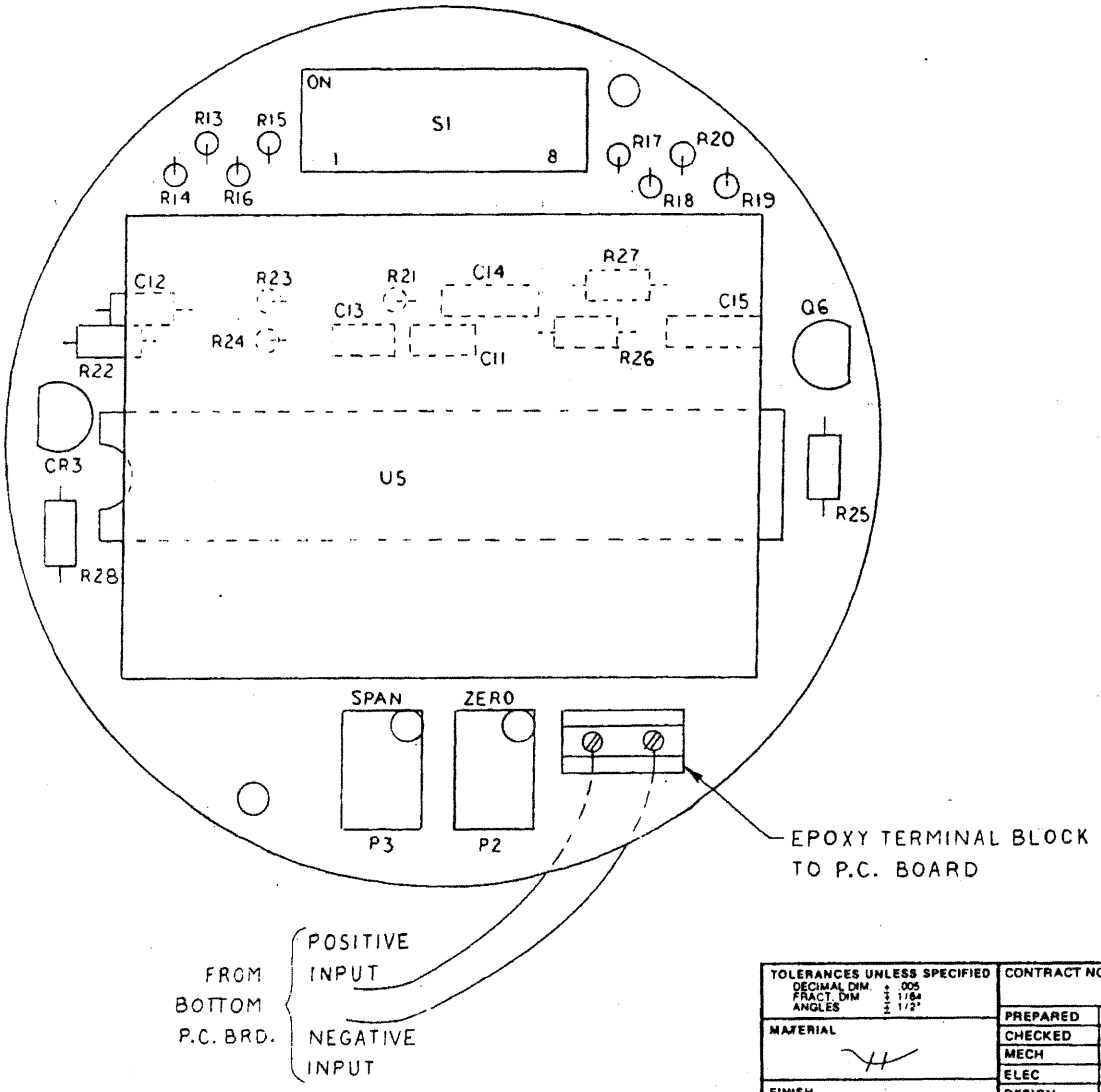

TOLERANCES UNLESS SPECIFIED DECIMAL DIM. ± .005 FRACT. DIM ± 1/64 ANGLES ± 1/2°	CONTRACT NO.		**DEVAR Inc.** 706 Bostwick Avenue, Bridgeport, Conn 06606 CONTROL PRODUCTS DIVISION
MATERIAL	PREPARED	MF	5/26/89
	CHECKED	LK	5/30/89
	MECH		
FINISH	ELEC		
	DESIGN		
	APPROVED	a.s.	9/1/89
NEXT B/M511558-01	APPROVED		

PC ASSEMBLY, TOP BOARD,
18-LPIX, MODIFIED

SIZE	DRAWING NO.	REV
B	511560	A

SCALE N.T.S. WT. SHEET 1 OF 2

SILVIE PRESS